RADIALL® COAXIAL department

TECHNICAL DATA

R163 355 001

Issue : 9125

Page 1 / 2

STRAIGHT BULKHEAD JACK with panel seal CLAMP TYPE , CABLE .250

SERIES: N 18 GHz

DEP90.R161.500

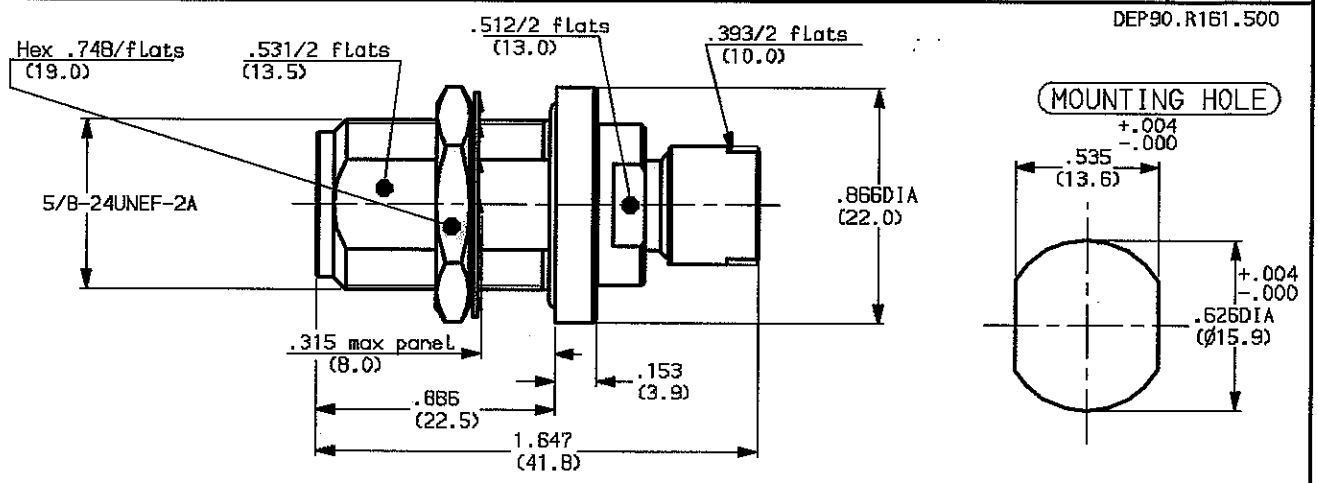

WEIGTH oz (g)

cables: .250

mounting instructions : M03

CHARACTERISTICS

NOMINAL IMPEDANCE	50	Ω
FREQUENCY RANGE	0-18	GHz
TEMPERATURE RATING	-40/+125	°C
VSWR	1.05 + 0.007 f(GHz)	
RF INSERTION LOSS	0.1	√F dB Maxi
VOLTAGE RATING	1000	Vrms Maxi
DIELECTRIC WITHSTANDING VOLTAGE	2000	Vrms mini
INSULATION RESISTANCE	5000	MΩ mini
HERMETIC SEAL	NA	cc/s Atm.cm3/s
LEAKAGE	0.641 .0044	psi MPa
(Low atmospheric air pressure)		
-		-

STANDARDISATION	MIL C 39012	
	CECC 22000	
	IEC 169-16	
DS 8811 - Aeronautic applications		
CABLE RETENTION	91.8 408	Lb mini N
CENTER CONTACT RETENTION		
Axial force - mating end	6.075 27	Lb mini N
Axial force - opposite end	6.075 27	Lb mini N
Torque (Min)	NA	Inch.oz cm.N
RECOMMENDED TORQUES		
Mating	NA	inch.Lb cm.N
Panel nut	44.3 500	inch.Lb cm.N
Clamp nut	31.01 350	inch.Lb cm.N

CONSTRUCTION

CONNECTOR PARTS	MATERIALS	FINISH
BODY	STAINLESS STEEL	PASSIVATED
OUTER CONTACT	STAINLESS STEEL	PASSIVATED
CENTER CONTACT	BERYLLIUM COPPER	GOLD
INSULATOR	POLYETHERIMID RESIN	-
INSULATOR	PTFE	-
GASKET	FLUOROCARBONE + FLUOROSILICON	-
-	-	-
-	-	-
-	-	-

ISSUE	REVISION No	DESCRIPTION	BY	DATE
.	.	.	.	.
.	.	.	.	.
.	.	.	.	.
.	.	.	.	.

Initiated on 29-JUN-90

Superseded on __-__-__

The information given here is subject to change without notice. Design changes may be in order to improve the product.

RADIALL®

martin

MOUNTING INSTRUCTIONS

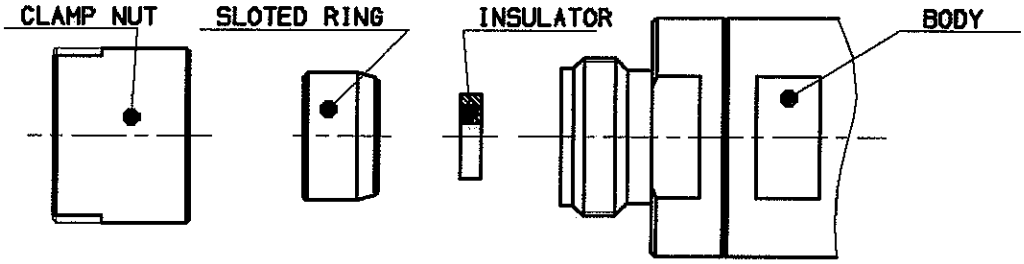

We recommend a cable thermal preconditioning before assembly

1

1-1 Strip the cable .

Stripping tool R 282 054

Positioner R 282 074

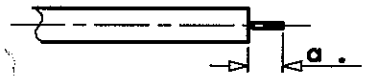

Stripping	a	b	c	d	e
inch	.201	–	–	–	–
mm	5.1	–	–	–	–

2

2-1 Trim cable centre conductor .

Trimmer R 282 074

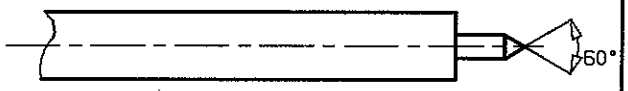

3

3-1 Slide clamp nut ,sloted ring and insulator onto the cable .

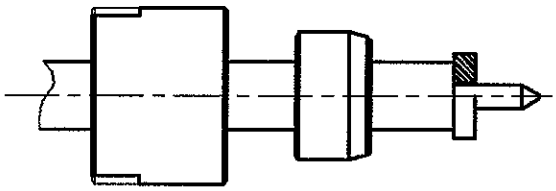

4

4-1 Introduce the cable into the connector and push it until it bottoms against body shoulder .

4-2 Screw the sub-assembly maintening the cable against body shoulder .

Recommended coupling torque : 31 in.Lb

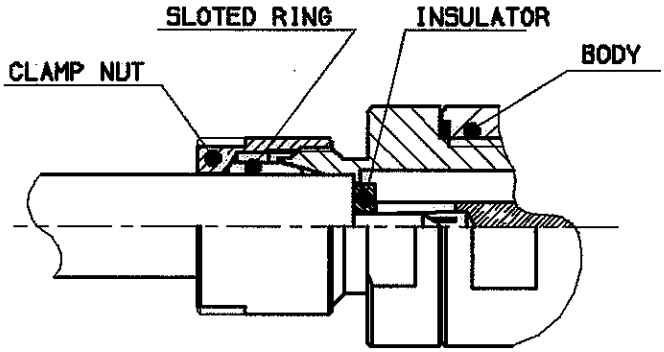

ISSUE	REVISION No	DESCRIPTION	BY	DATE
.	.	.	.	.
.	.	.	.	.
.	.	.	.	.
.	.	.	.	.

Initiated on __-__-__

Superseded on __-__-__

The information given here is subject to change without notice. Design changes may be in order to improve the product.

RADIALL®